Pasco County Biosolids Facility: Achieving Class AA Biosolids Treatment Via Solar Drying Paired with Limited Fossil Fuel Pasteurization

Ted Merrell

SWANA FL Summer Conference
July 29, 2019

Presentation Overview

- County’s Current Biosolids Program
- History of this Project
- Drivers for Alternative Biosolids Processing
- Facility Design
- Facility Operation
- Project’s Current Status

Pasco County Biosolids Program

- Yearly production ≈ 23,000 wet tons
- Waste activated sludge is dewatered at the following facilities:
  - Shady Hills
  - Wesley Center
  - Land O'Lakes
  - Southeast
- Dewatered sludge cake (16% solids or 84% water) is hauled via hauling contract. Historically has been composted or landfilled at facilities as far away as Georgia.

History of the Biosolids Project

In 2011, County conducted RFP process to solicit proposal for Design-Build-Operate of new Biosolids Facility

Top-ranked “Earth, Wind, and Fire,” which claimed to use their proprietary MicroFuel technology to convert carbon pellets and dried biosolids to create a synthetic diesel fuel – company appeared to dissolve after RFP process

County approved moving forward with negotiations with Merrell Bros. (second highest ranked) for biosolids facility

County and Merrell Bros. developed preliminary design of facility, construction and service agreements, and completed detailed design phase

Drivers for Alternative Biosolids Processing

Revised State Rule 62-640

- Revised in 2010
- Restricted Class B in parts of Lake, Orange and Seminole Counties
- Restricted Class B in the Lake Okeechobee Watershed unless no net increase in phosphorous
- Restricted Class B in the Caloosahatchee and St. Lucie River Watersheds unless no net increase in phosphorous and nitrogen
- Limits quantity that can be stockpiled at land application site

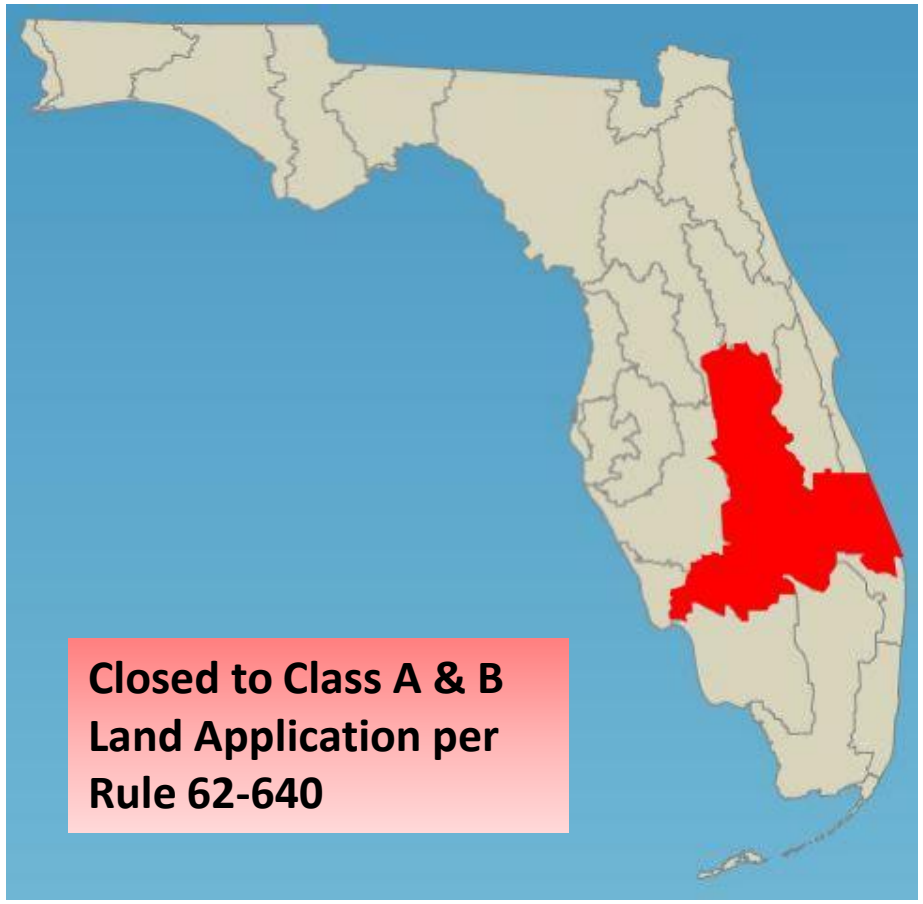

Drivers for Alternative Biosolids Processing *(cont.)*

Additional Restrictions for Biosolids Land Application by County

- 33% of Florida's Counties already have restrictive biosolids ordinances
- Another 20% are considering restrictive biosolids ordinances
- Many other counties (including Pasco) have FDEP imposed biosolids land applications restrictions due to sensitive spring watersheds

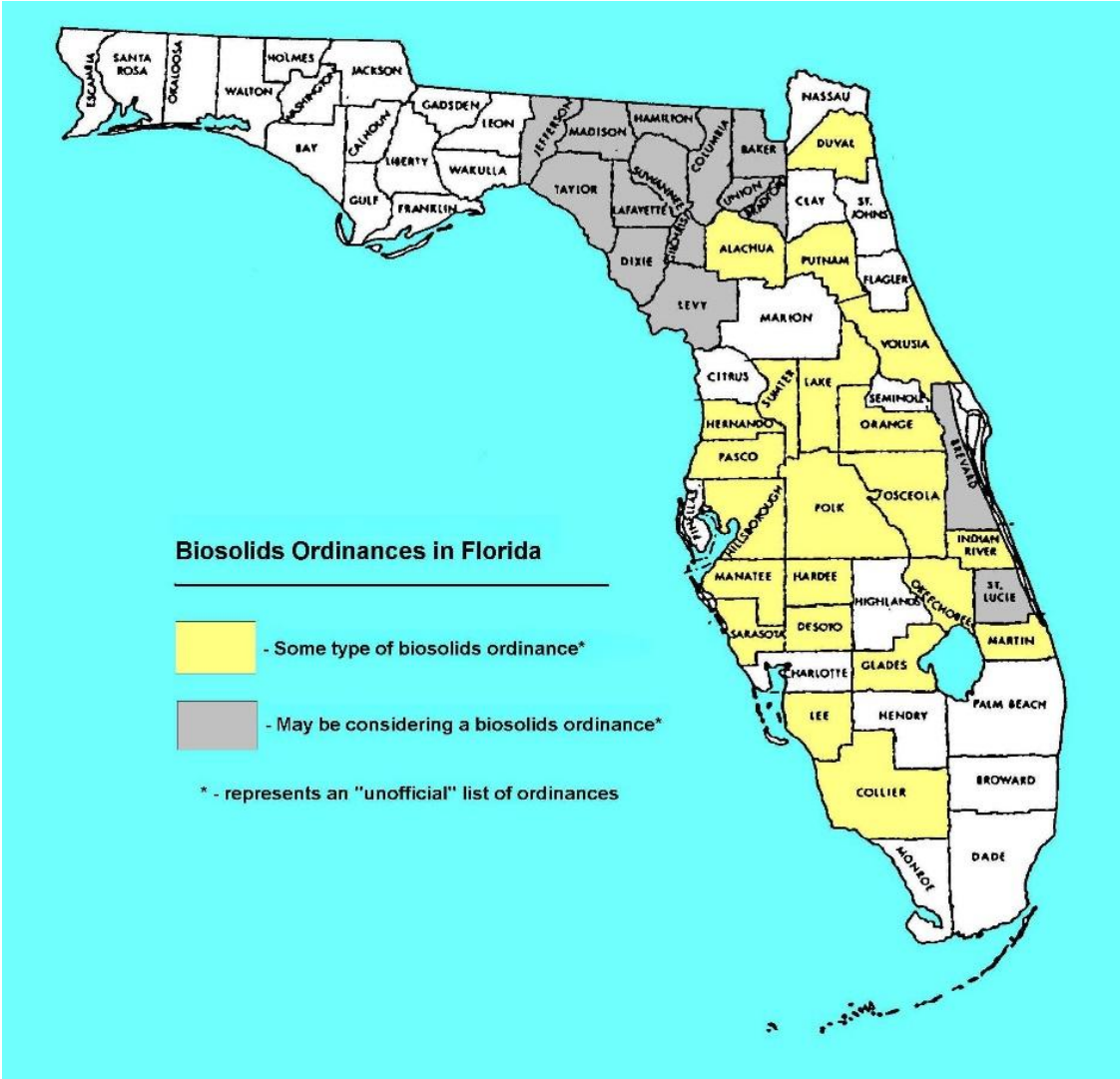

Drivers for Alternative Biosolids Processing *(cont.)*

LANDFILL DISPOSAL ISSUES

With land application reduced, there has been a **dramatic increase** in Sub-B, Class B and Class A biosolids being sent to landfills

Most landfills have reduced intake volumes or **banned biosolids** received altogether because of capacity and impact to operation

In addition to **major odor issues**, biosolids create potential **dangers** to landfill operators due to the material's **instability** – because of wetness it compresses easily and provides little support structure

Biosolids in a landfill have a long-term effect on the leachate system which potentially **affects the life** of the landfill cell

Drivers for Alternative Biosolids Processing *(cont.)*

ECONOMIC IMPACT

Shortage of application sites + increasing production = **landfill disposal price increases**

Tipping fee for Pasco's sludge at largest receiving landfill in central Florida increased nearly 13% at time of RFP

Facility Design

Facility consists of three main components

1. Greenhouse drying "pods" – dry biosolids using solar energy, ventilation, and mixing from 16% solids to 60% solids

2. Pasteurization Building – houses the belt dryer which uses natural gas to dry material to 75% solids

3. Odor Control Systems – treats air exhausted from biosolids processing areas

Site Plan

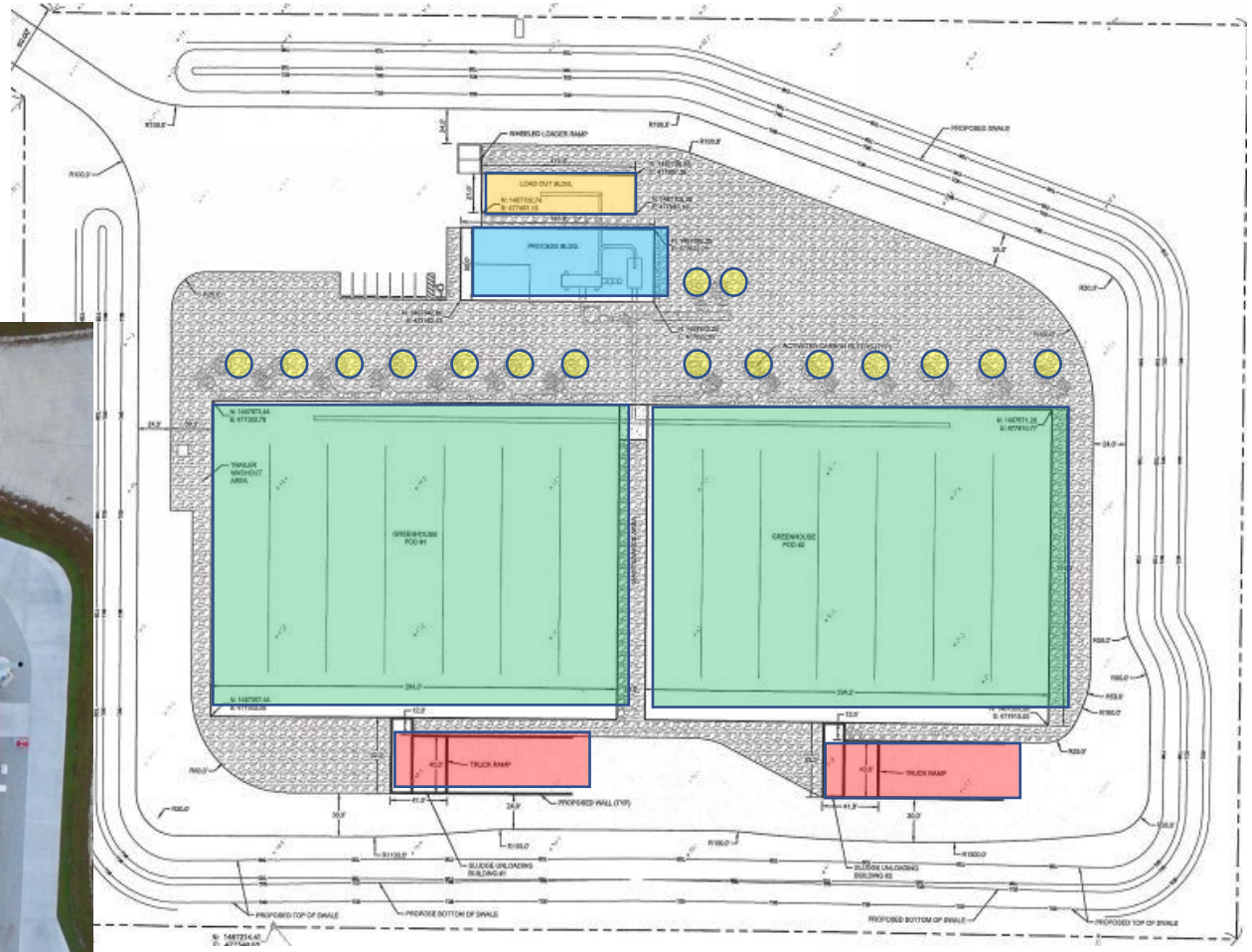
WHEELED LOADER RAMP
LOAD OUT BLDG.
PROCESS BLDG.
PROPOSED SWALE
ACTIVATED CARBON FILTER (TYP)
TRAILER WASHOUT AREA
GREENHOUSE POD #1
GREENHOUSE POD #2
TRUCK RAMP
TRUCK RAMP
PROPOSED WALL (TYP)
SLUDGE UNLOADING BUILDING #1
SLUDGE UNLOADING BUILDING #2
PROPOSED TOP OF SWALE
PROPOSE BOTTOM OF SWALE
PROPOSED BOTTOM OF SWALE
PROPOSED TOP OF SWALE

Biosolids Receiving


D-67
MERRELL
BROS
MAC
Trailer


MERRELL
BROS.
MAC
Trailer

Greenhouse Pods

Solar Drying and Agitation

Solar Drying and Agitation

Odor Control

Odor Control *(cont.)*

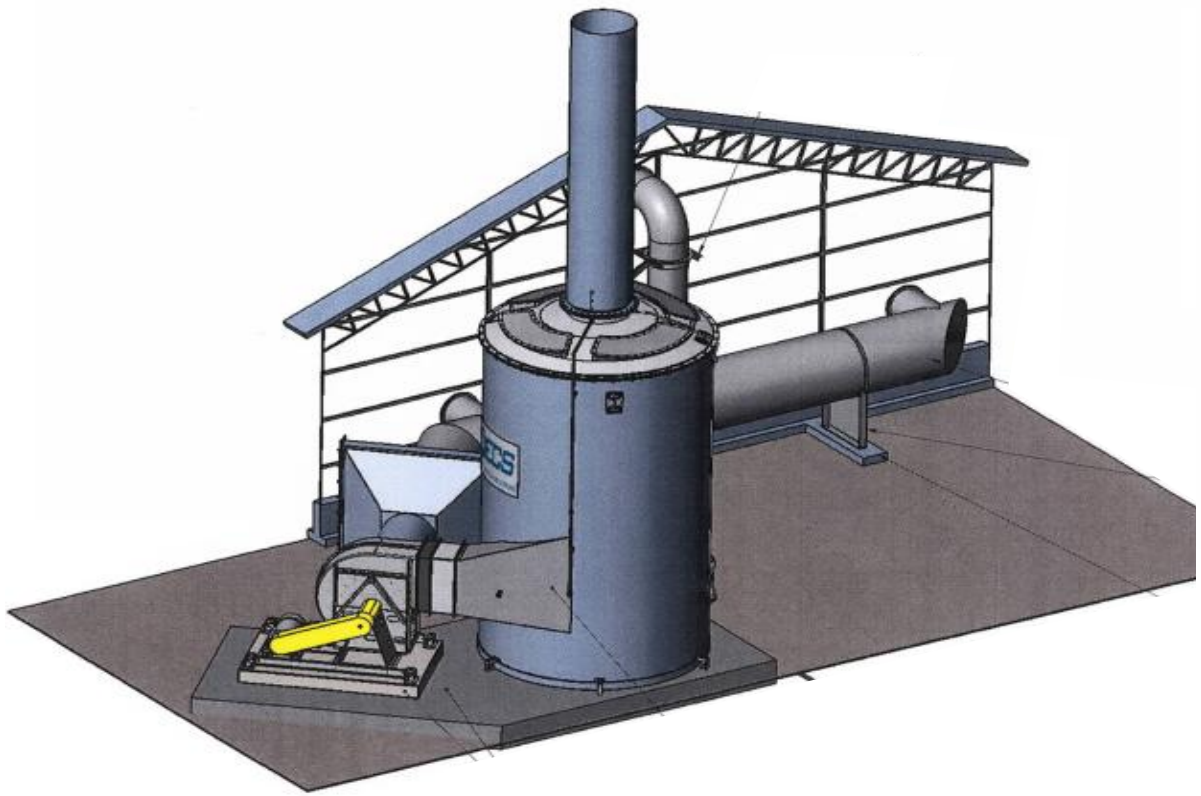

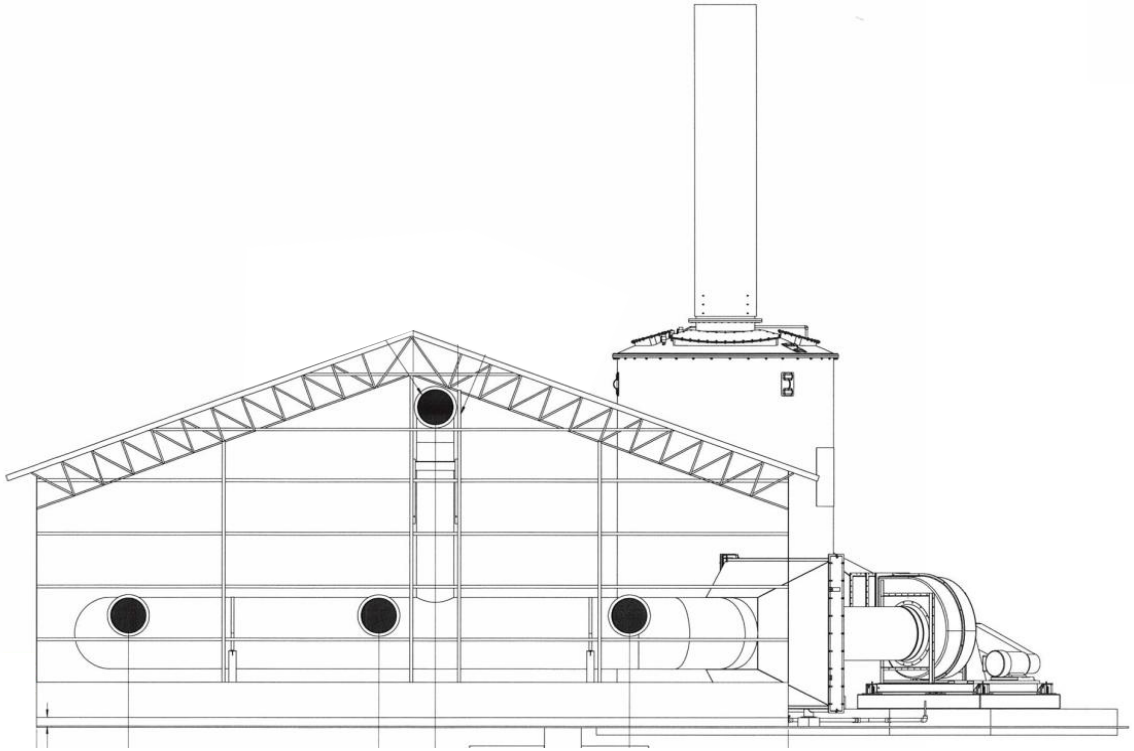

Odor Control: **Evaluation Performed**

- System was piloted with Pasco County biosolids
- Odor samples were taken and analyzed for chemical composition and for olfactory sensing
- Odor and meteorological data was modeled in AERMOD odor assessment model
- Many odor control technologies and configurations were modeled to establish performance criteria to minimize off-site odor

Product Conveyance

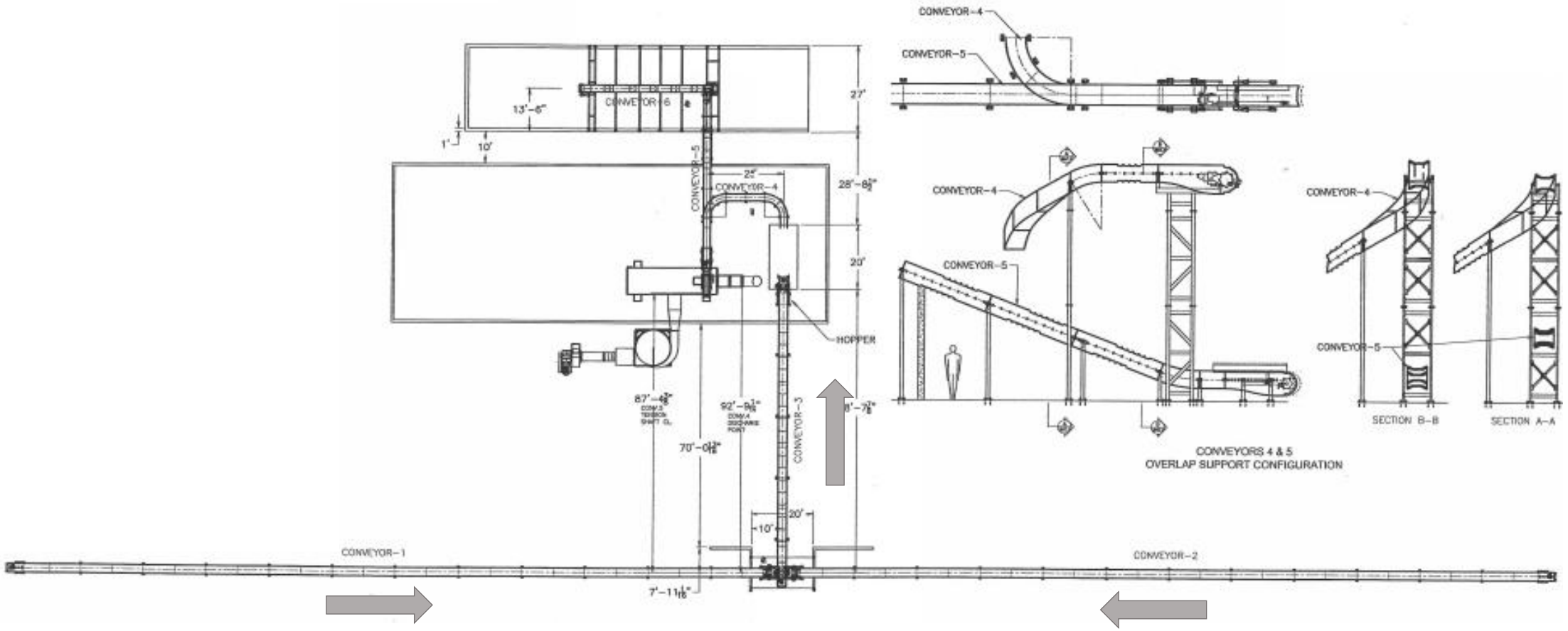

Product Conveyance

Day Hopper

Pasteurizing Building

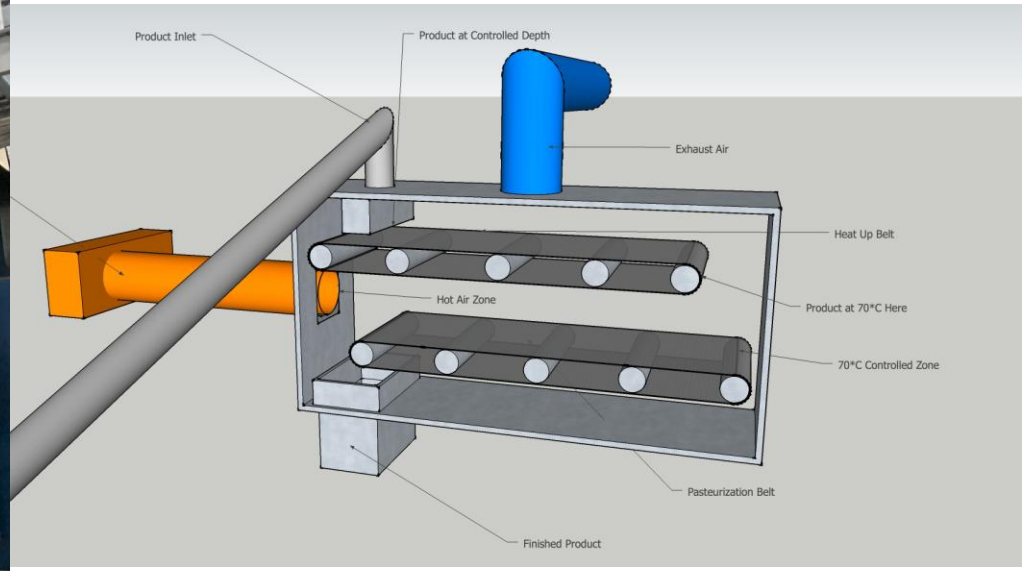

NORRIS THERMAL TECHNOLOGIES
global equipment solutions

Pasteurization Building

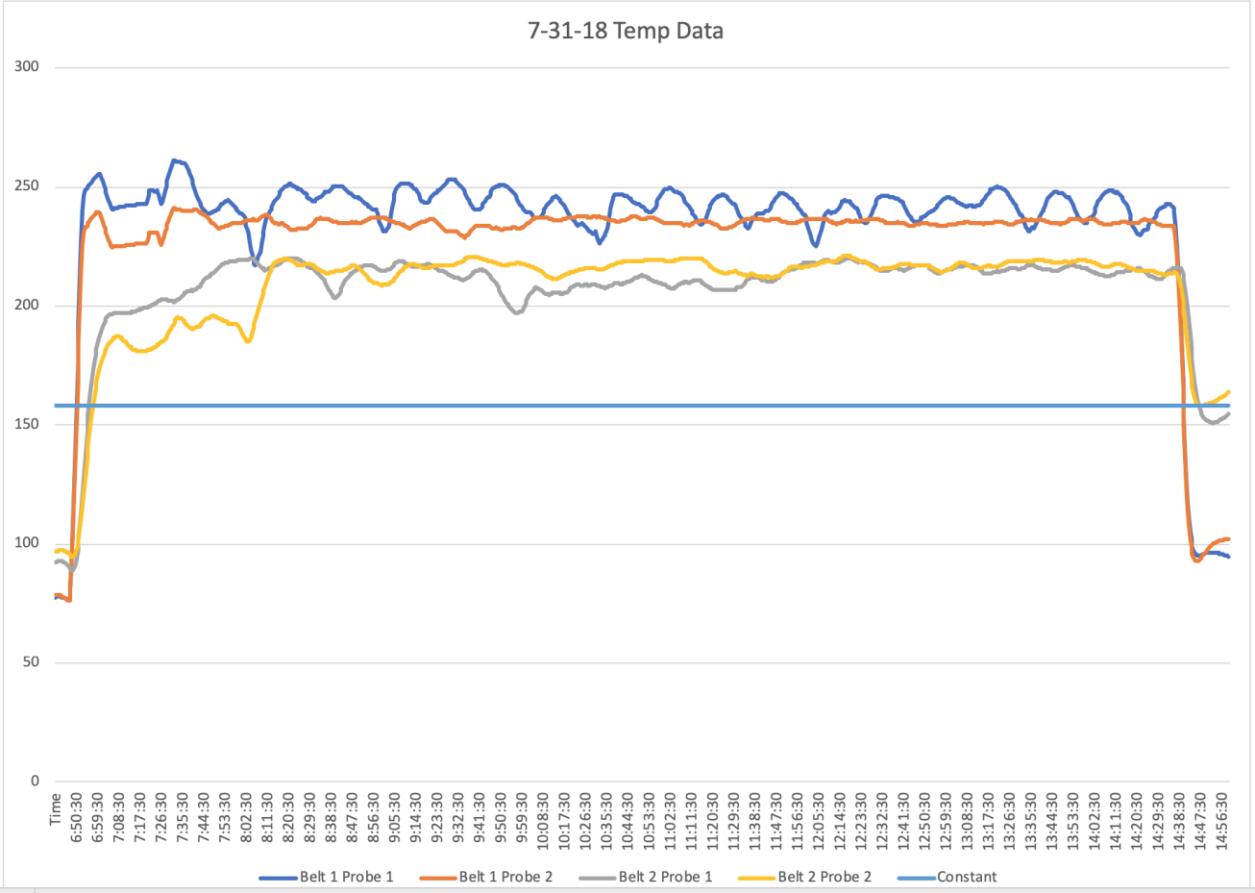

Date: 10-23-18

Operator: Scott

Signed:

Pasteurizer Belt Speed Time Recordings

Travel Time + Hz Relationship: The travel time of the belt pasteurizer is required to be 30 minutes or meet Class A pathogen reduction, when combined with tempatures of 70C (158F) or higher al product is 75% solids or greater. Using the known electric motor reduction ratio of 3,750 or used on the belt dryer, a Hz value is calculated that will determine the travel time vs. Hz e electric motor. As long as the electric motor has 40.818 or less Hz applied (read using the ad-out VFD), the belt travel speed will equal 30 minutes or greater. This sheet is used to *monitor* the pasteurization time, to demonstrate compliance, as reqiured per FGP permit, FLA969150.

	Time (00:00 AM)	Motor Hz Recorded (Digital Readout on VFD)	At or Less Than 40.818 Hz? (circle one)
	7:05	30	yes / no
	8:05	31	yes / no
	809	RESET TO 77	yes / no
	9:10	BACK TO GOOD	yes / no
	9:10	31	yes / no
	10:10	31	yes / no
	11:10	31	yes / no
	12:10	31.5	yes / no
	1:10	31.5	yes / no
	2:10	31	yes / no
	3:10	30.8	yes / no
	3:26 Shut off		yes / no
			yes / no
			yes / no
			yes / no
			yes / no

Percent Solids Recordings

Weight of Dish + Weight of Wet Cake	53456.4
- (minus) Weight of Dish	48948.8
= (equals) Weight of Wet Cake	4507.6
Weight of Dish + Weight of Dried Cake	52383.4
- (minus) Weight of Dish	48948.8
= (equlas) Weight of Dried Cake	3434.6
Weight of Dried Cake	3434.6
Divided By	
Weight of Wet Cake	45076
= (equals) Percent Solids	76.2

Greater than 75% solids? (circle one) yes / no

Notes: BAY 9

t all material was pasteurized for 30 minutes or longer, in order to achieve Class A pathogen reduction by meeting the requirements in Section 503.32(a)(7) of) CFR Part 503: The tempature of the biosolids shall be maintained at 70C (158F) or higher for 30 minutes or longer. Time and Temperature was routinely ed to demonstrate compliance with pathogen reduction requirements specified in Rule 62-640.600, F.A.C. [62-640.650(3)(A)2][62-640.600(1)(A)]. Vector eduction for Class A biosolids (Section 503.33(b)(7) of Title 40 CFR Part 503) is achieved as the final product achieves 75 % solids or greater. This document is to serve as record that time and perecent solids was routinely monitored throughout processing.

FLORIDAGREEN®
FERTILIZER

Benefits

- Product is approved by State as Class AA fertilizer
- Dry and uniform product is highly marketable and easy to handle
- Operationally simple – not equipment intensive
- Co-located next to WWTP and WTE Facility
- Solar energy offsets bulk of gas usage
- Reliability of dryer to provide Class A pathogen destruction

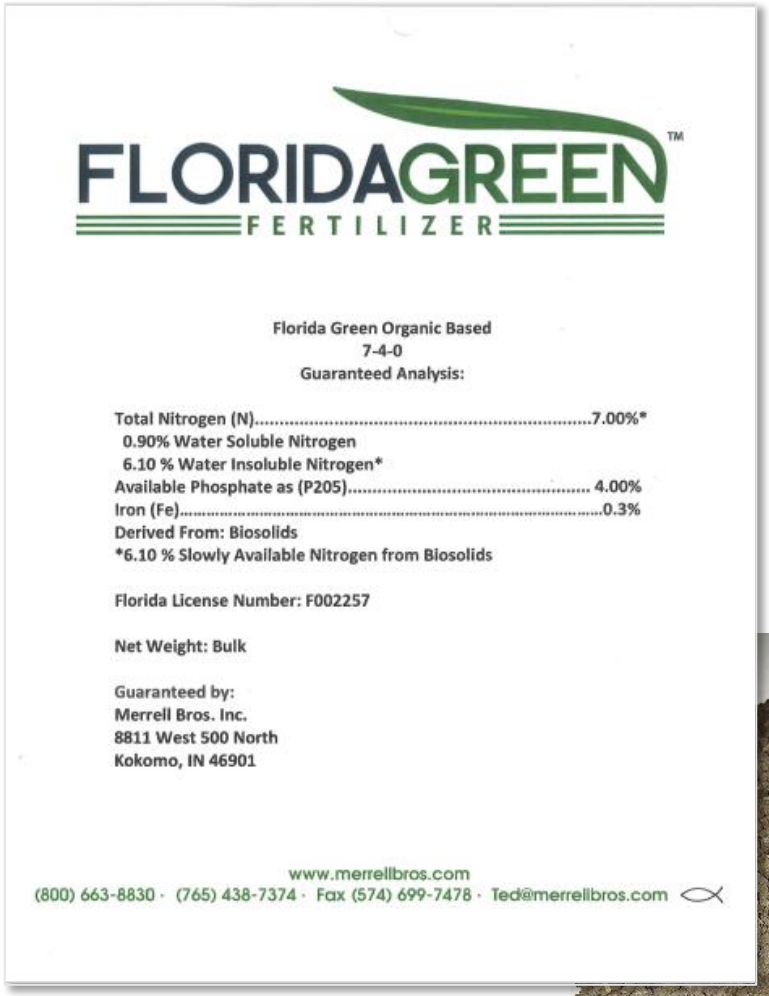

FLORIDAGREEN™
FERTILIZER

Florida Green Organic Based
7-4-0
Guaranteed Analysis:

Total Nitrogen (N).....7.00%*
0.90% Water Soluble Nitrogen
6.10 % Water Insoluble Nitrogen*
Available Phosphate as (P205)..... 4.00%
Iron (Fe).....0.3%
Derived From: Biosolids
*6.10 % Slowly Available Nitrogen from Biosolids

Florida License Number: F002257

Net Weight: Bulk

Guaranteed by:
Merrell Bros. Inc.
8811 West 500 North
Kokomo, IN 46901

www.merrellbros.com
(800) 663-8830 · (765) 438-7374 · Fax (574) 699-7478 · Ted@merrellbros.com

Components of the Deal: **Basics**

The business arrangement (the Deal) is between Pasco County and Merrell Bros. Inc. (Contractor)

- Engineering (civil, structural, MEP) services provided by Kimley-Horn
- The Project was delivered using a design/build/operate approach.
- The Design/Build (DB) portion was contracted to Merrell Bros. LLC with Merrell Bros. Inc. providing a parent guarantee for performance
- The Operation portion is contracted with Merrell Bros. Inc.

Components of the Deal: **Design-Build Agreement Summary**

Guaranteed Not To Exceed Price (NTEP) was approximately $13.4M.

Strict Acceptance and Performance Criteria

- Processing capacity
- Product quality
- Odor control
- Energy consumption
- Environmental regulatory compliance

Components of the Deal: **Service Agreement Summary**

Term Provisions

- Term is for 15 years with three 5-year renewals at mutual agreement of the parties.

Pricing Provisions

- Fixed price subject to annual escalation
- Host Community Fee, subject to annual escalation, for all tons from non-county owned facilities.
- Contractor guarantees delivery of 50,000 wet tons per year or pays the County the host community fee for any short fall to this number.
- County to share in all biosolids products revenues

Components of the Deal: **Service Agreement Summary** *(cont.)*

Operation and Maintenance Contractor Responsibilities

- Collect biosolids from County-owned WWTPs and deliver to the Facility
- Operate, maintain, and repair the Facility in accordance with standards of maintenance
- Meet all performance guarantees
- Disposal of any unprocessed biosolids and non- marketable products at a location/facility which is not County–owned

Other Provisions

- Maintain payment and performance bonds
- Maintain county specified insurances
- Standard county indemnification
- Termination for non-performance

Contact Us!

Ted Merrell

Merrell Bros., Inc.

800.663.8830

ted@merrellbros.com

www.merrellbros.com

www.facebook.com/merrellbros

MERRELL BROS.

A Biosolids Management Corporation